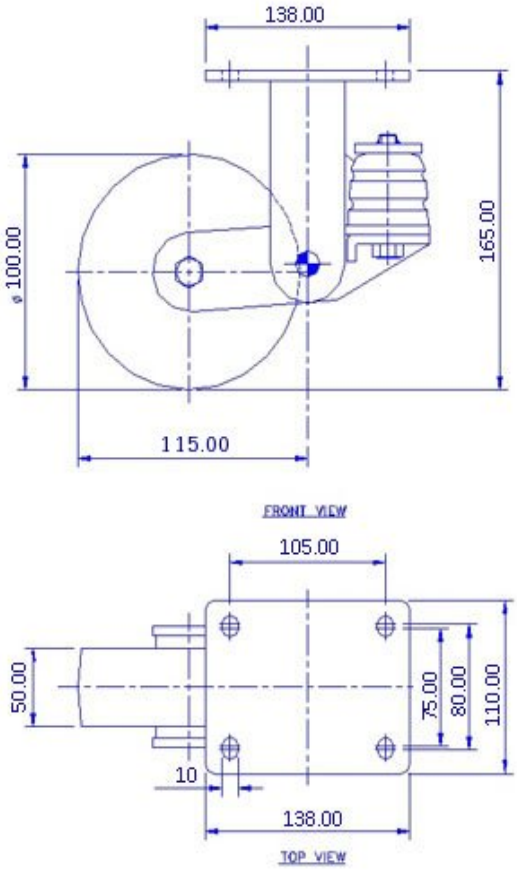

ALL DIMENSIONS ARE IN "mm"

GHKE-SPR-42S-SFS