MUVTONS
Moving tons..... so easily

GHKE-SPR-82S-ME-WFB

Fork Properties

900kgs load capacity spring loaded castors

- Single piece forged alloy steel top plate with integrally forged kingpin
- Precision CNC machined raceways
- Induction hardened raceways ensure swivel head longevity
- Totally sealed swivel head with grease nipple
- Strong elastomeric spring elements designed for specific load ranged ensure uniform cushion effect through the load range unlike stiff steel spring elements that do not react at lower loads and are ineffective on low load or empty trolleys
- Specific elastomeric spring elements available to suit different load ranges
- Strong 6mm thick fabricated construction of forks robotically welded inside & outside
- 12mm Wheel Axle
- Finish: Zinc plate; ROHS compliant or Black polymer color coated
- Options : 4 way directional lock, Total lock, Wheel face brake

Wheel Properties

Muvtons Ergonomic wheels for effortless rolling, very low push pull efforts required to move heavy loads. Generous amount of premium polyurethane 93° ±3° Shore A firmly bonded, mechanically & chemically to precision machined cores. Proven for excellent chemically, to precision machined cores. Proven for excellent performance in most demanding applications for manual and power performance in most demanding applications for manual and power towing. They are non-marking and floor protective. Tested & Guaranteed against bond failures. Softer 83° ±3° Shore A durometer for greater tractive resistance and harder 73° ±3° Share D polyurethane treads for extremely low rolling resistance are also offered. Wheel bearing options: Sealed precision ball bearings, tapered roller bearings or roller bearings. Temperature range : -20°C to +85°C Tread Options : Anti-static; conductive wheels are available.

Technical Data	
Castor Type	Swivel Castor with Brake
Wheel Material	Polyurethane
Wheel Hardness	93° ± 3° Shore A
Wheel Center	Cast Iron
Wheel Dia(mm)	200
Tread Width(mm)	50
Load Capacity(kg)	775
Wheel Bearing	Ball Bearing
Overall Height(mm)	257
Swivel Radius(mm)	182
Swivel Radius WFB(mm)	182
Top Plate(mm)	138 x 110
Bolt Hole Centers	105 x 75-80
Non Marking	yes
Heat Resistant	Yes
Noise Reduction	-

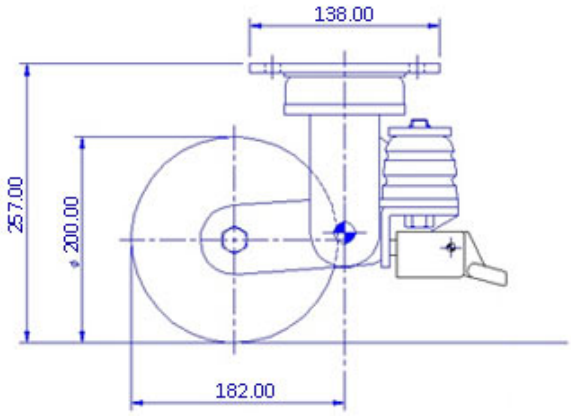

FRONT VIEW

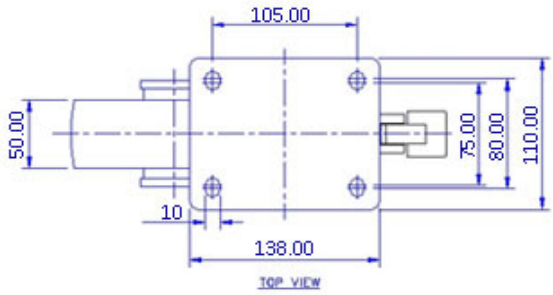

TOP VIEW

© **Muvtons Castors Pvt. Ltd.** All Rights Reserved (Terms of Use)